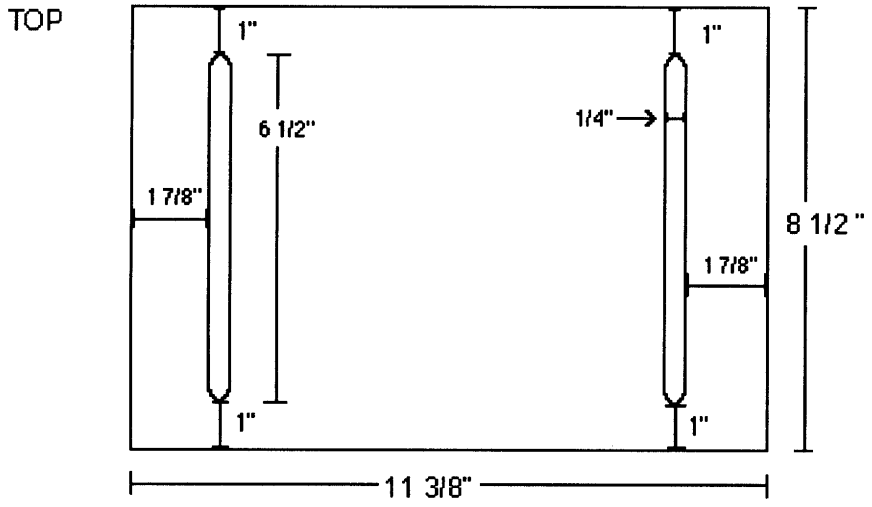

screw-on cage sides, 2/cage

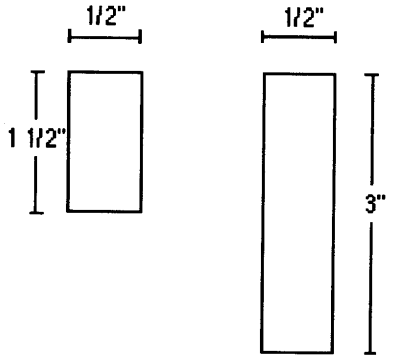

Assembly:
The smaller piece gets glued directly onto the larger piece, and then this unit is glued onto the upper corners of the screw-on cage sides (see diagram below).

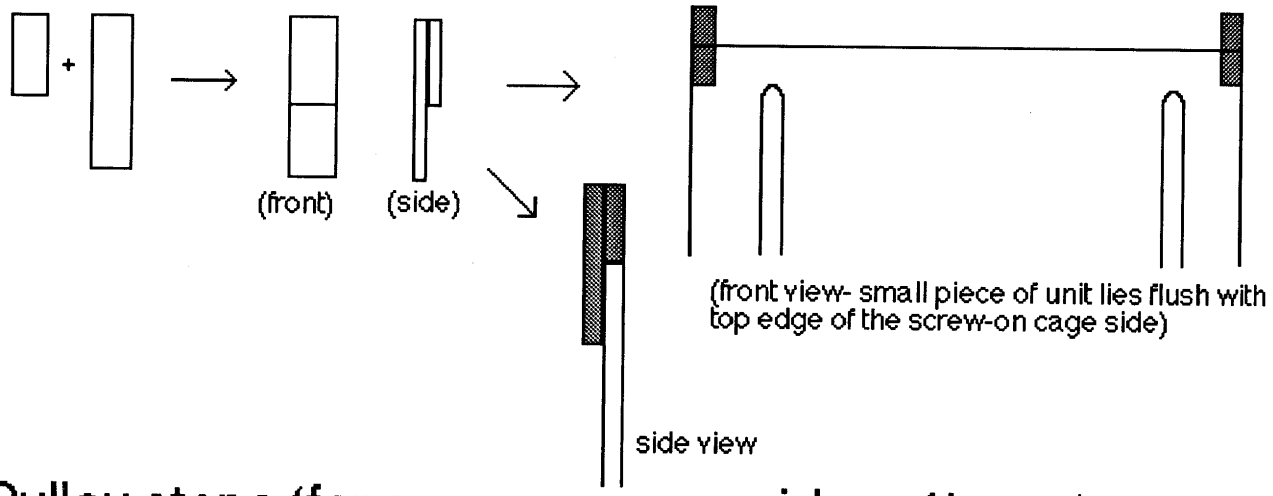

Pulley stops (for screw-on cage sides, 4/cage)